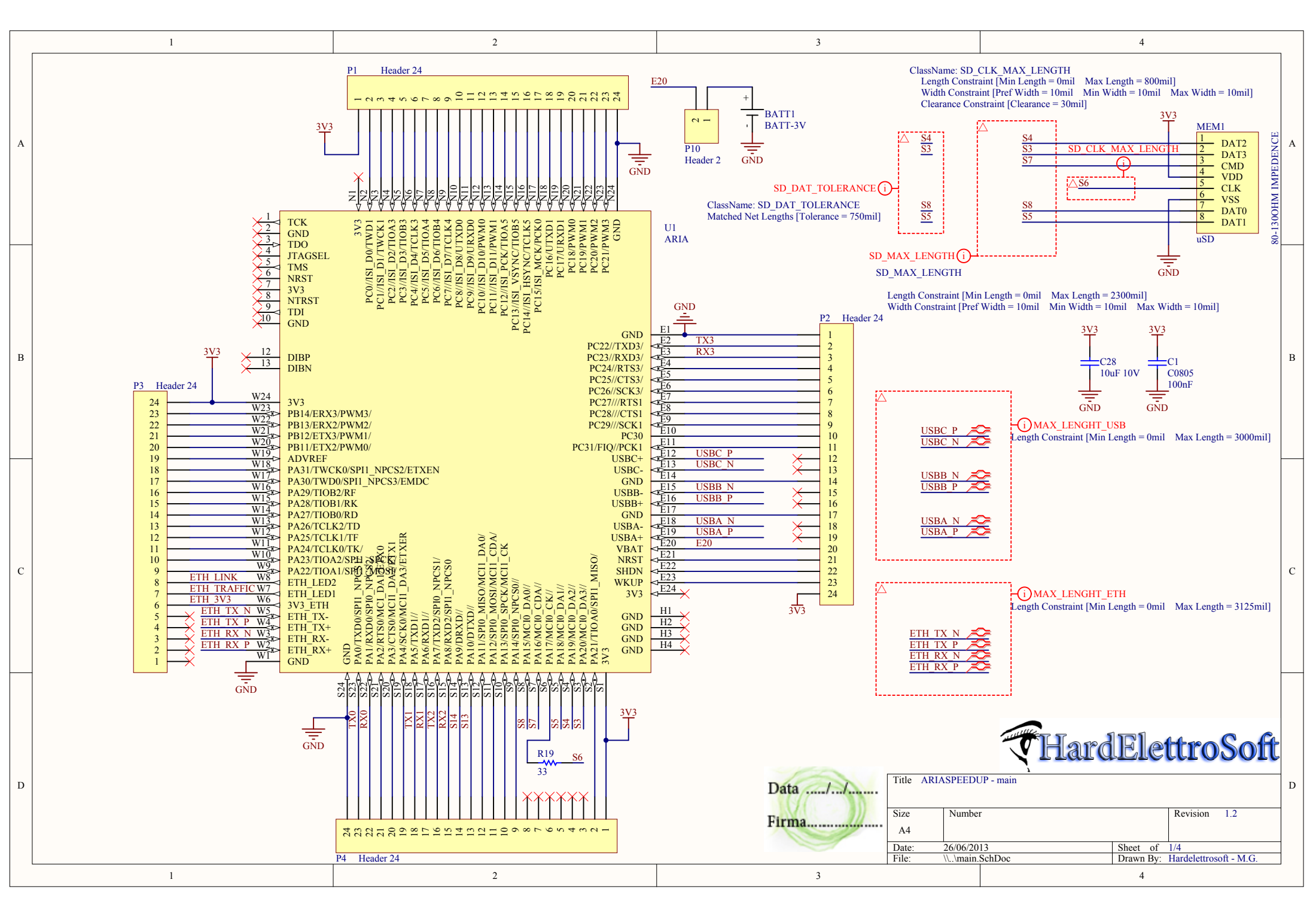
P1 Header 24
3V3
GND
E20
P10 Header 2
BATT1
BATT-3V
GND
ClassName: SD_CLK_MAX_LENGTH
Length Constraint [Min Length = 0mil Max Length = 800mil]
Width Constraint [Pref Width = 10mil Min Width = 10mil Max Width = 10mil]
Clearance Constraint [Clearance = 30mil]
SD_DAT_TOLERANCE
ClassName: SD_DAT_TOLERANCE
Matched Net Lengths [Tolerance = 750mil]
SD_MAX_LENGTH
SD_MAX_LENGTH
SD_CLK_MAX_LENGTH
MEM1
DAT2
DAT3
CMD
VDD
CLK
VSS
DAT0
DAT1
uSD
80-130OHM IMPEDENCE
U1
ARIA
TCK
GND
TDO
JTAGSEL
TMS
NRST
3V3
NTRST
TDI
GND
DIBP
DIBN
3V3
PB14/ERX3/PWM3/
PB13/ERX2/PWM2/
PB12/ETX3/PWM1/
PB11/ETX2/PWM0/
ADVREF
PA31/TWCK0/SPI1_NPCS2/ETXEN
PA30/TWD0/SPI1_NPCS3/EMDC
PA29/TIOB2/RF
PA28/TIOB1/RK
PA27/TIOB0/RD
PA26/TCLK2/TD
PA25/TCLK1/TF
PA24/TCLK0/TK/
PA23/TIOA2/SPI1_SPCK
PA22/TIOA1/SPI1_MOSI
ETH_LINK
ETH_TRAFFIC
ETH_3V3
ETH_TX_N
ETH_TX_P
ETH_RX_N
ETH_RX_P
ETH_LED2
ETH_LED1
3V3_ETH
ETH_TX-
ETH_TX+
ETH_RX-
ETH_RX+
GND
PC0//ISI_D0/TWD1
PC1//ISI_D1/TWCK1
PC2//ISI_D2/TIOA3
PC3//ISI_D3/TIOB3
PC4//ISI_D4/TCLK3
PC5//ISI_D5/TIOA4
PC6//ISI_D6/TIOB4
PC7//ISI_D7/TCLK4
PC8//ISI_D8/UTXD0
PC9//ISI_D9/URXD0
PC10//ISI_D10/PWM0
PC11//ISI_D11/PWM1
PC12//ISI_PCK/TIOA5
PC13//ISI_VSYNC/TCLK5
PC14//ISI_HSYNC/PCK0
PC15/ISI_MCK/PCK0
PC16/UTXD1
PC17/URXD1
PC18/PWM0
PC19/PWM1
PC20/PWM2
PC21/PWM3
GND
GND
PC22//TXD3/
PC23//RXD3/
PC24//RTS3/
PC25//CTS3/
PC26//SCK3/
PC27///RTS1
PC28///CTS1
PC29///SCK1
PC30
PC31/FIQ//PCK1
USBC+
USBC-
GND
USBB-
USBB+
GND
USBA-
USBA+
VBAT
NRST
SHDN
WKUP
3V3
TX3
RX3
USBC_P
USBC_N
USBB_P
USBB_N
USBA_P
USBA_N
E20
GND
GND
GND
GND
P2 Header 24
P3 Header 24
P4 Header 24
R19
33
S6
Length Constraint [Min Length = 0mil Max Length = 2300mil]
Width Constraint [Pref Width = 10mil Min Width = 10mil Max Width = 10mil]
C28
10uF 10V
C1
C0805
100nF
MAX_LENGHT_USB
Length Constraint [Min Length = 0mil Max Length = 3000mil]
MAX_LENGHT_ETH
Length Constraint [Min Length = 0mil Max Length = 3125mil]
HardElettroSoft
Data ...../.../.....
Firma.....
Title ARIASPEEDUP - main
Size A4
Number
Revision 1.2
Date: 26/06/2013
Sheet of 1/4
File: \\..\main.SchDoc
Drawn By: Hardelettrosoft - M.G.

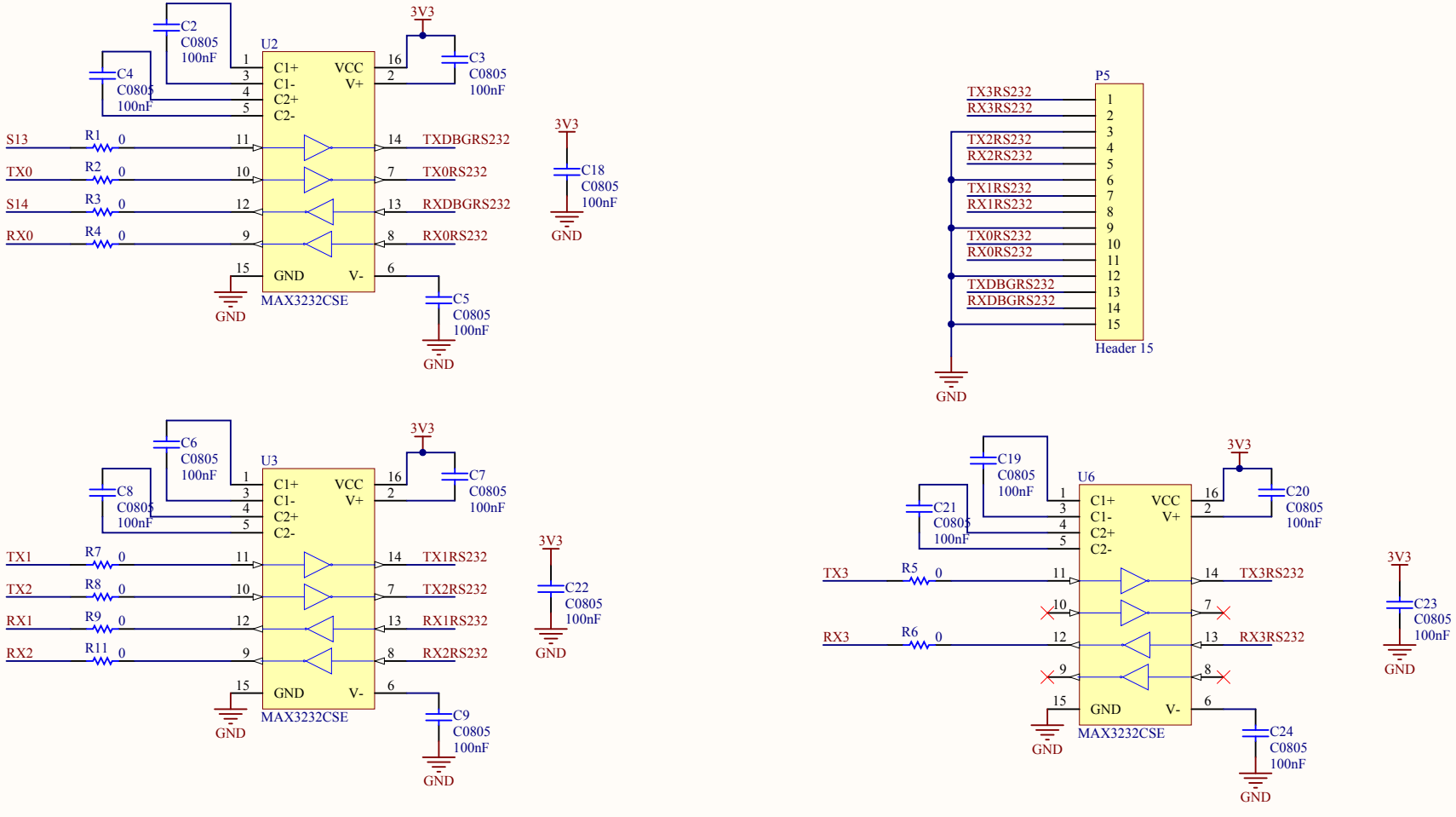


HardElettroSoft

Data ...../.../.....

Firma.....

| | | |
|---|---|---|
| Title ARIASPEEDUP - serial | | |
| Size A4 | Number | Revision 1.2 |
| Date: 26/06/2013 | | Sheet of 3/4 |
| File: \\..\serial.SchDoc | | Drawn By: Hardelettrosoft - M.G. |

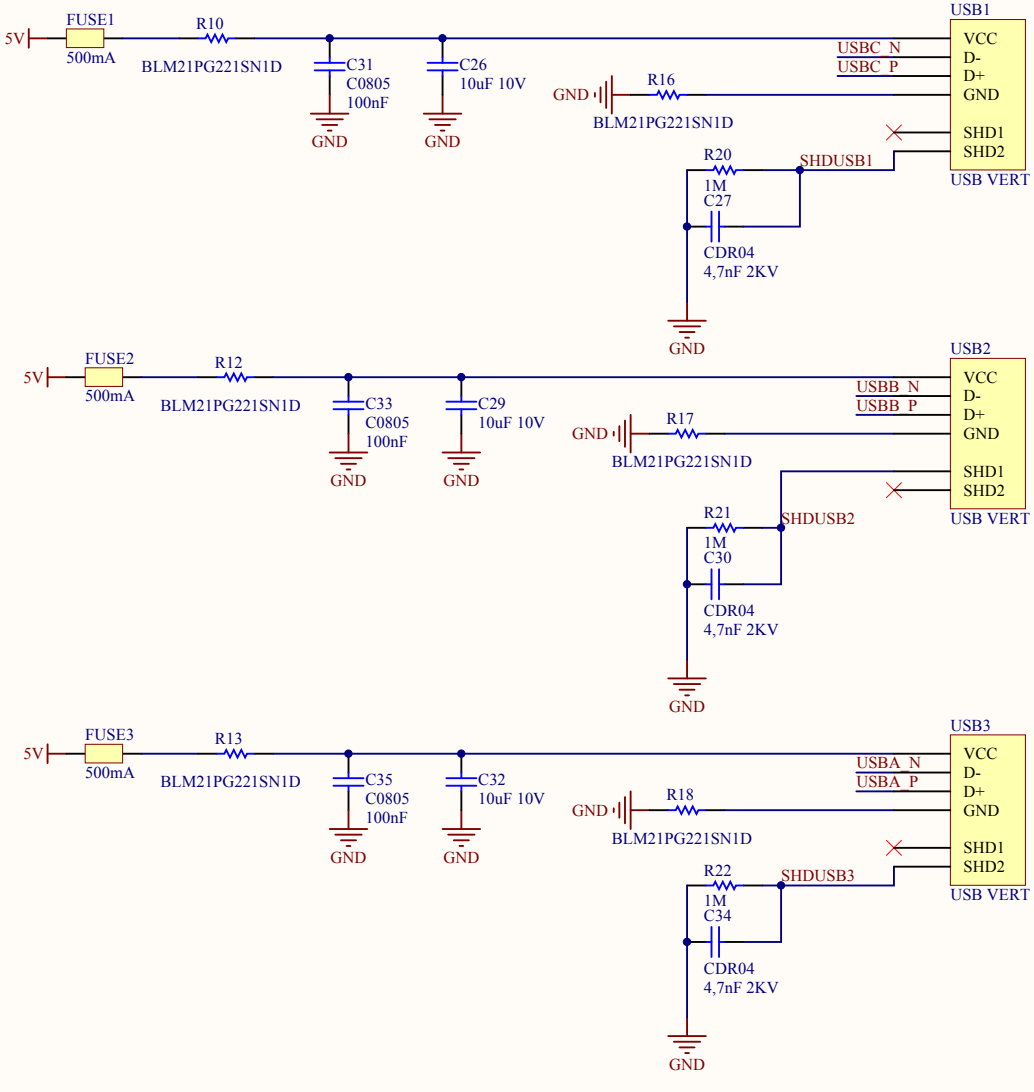


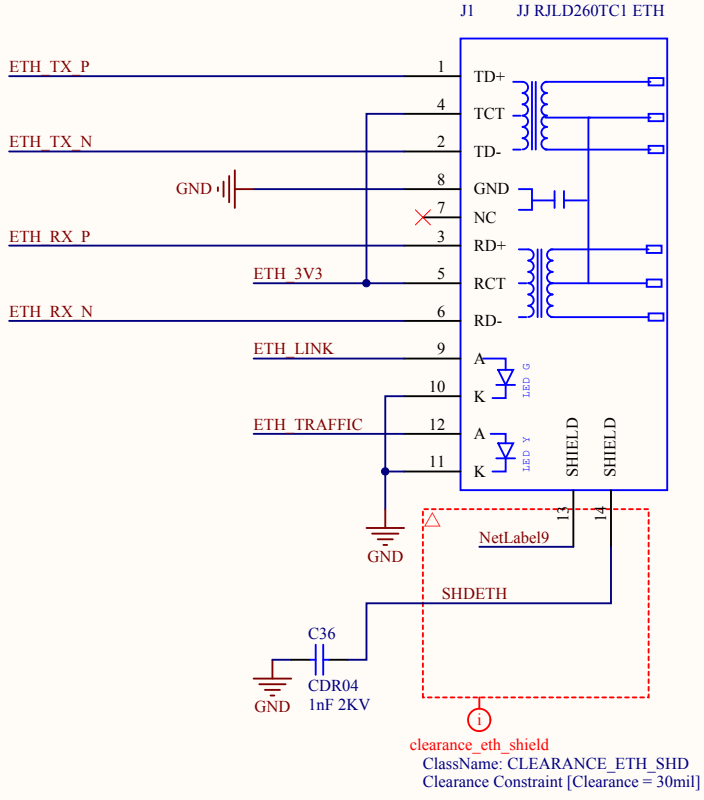


HardElettroSoft

Data ...../.../.....

Firma.....

| | | |
|---|---|---|
| Title ARIASPEEDUP - usb & eth | | |
| Size A4 | Number | Revision 1.2 |
| Date: 26/06/2013 | | Sheet of 2/4 |
| File: \\..\sheet2.SchDoc | | Drawn By: Hardelettrosoft - M.G. |

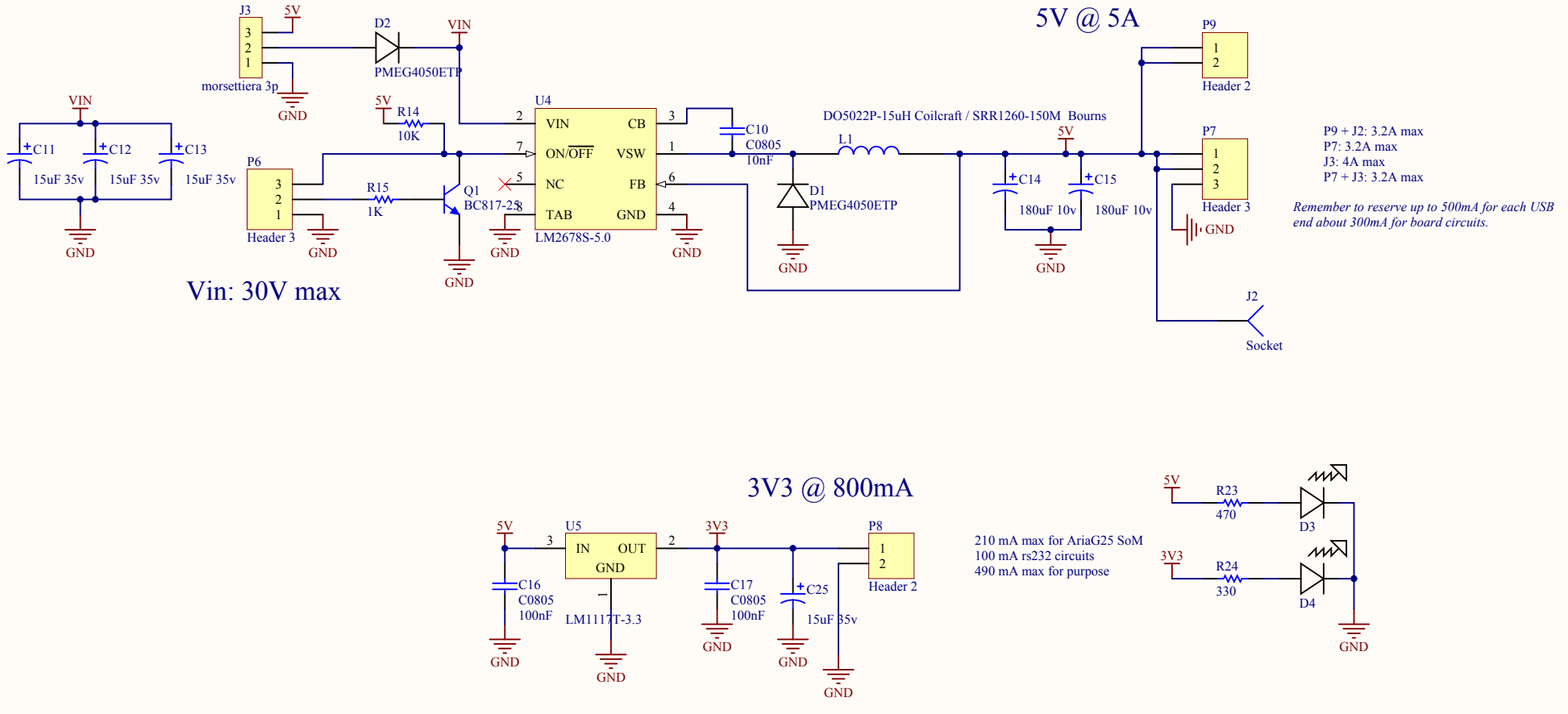


HardElettroSoft

Data ...../...../.....

Firma.....

| | | |
|---|---|---|
| Title ARIASPEEDUP - switching | | |
| Size A4 | Number | Revision 1.2 |
| Date: 26/06/2013 | | Sheet of 4/4 |
| File: \\..\switching.SchDoc | | Drawn By: Hardelettrosoft - M.G. |

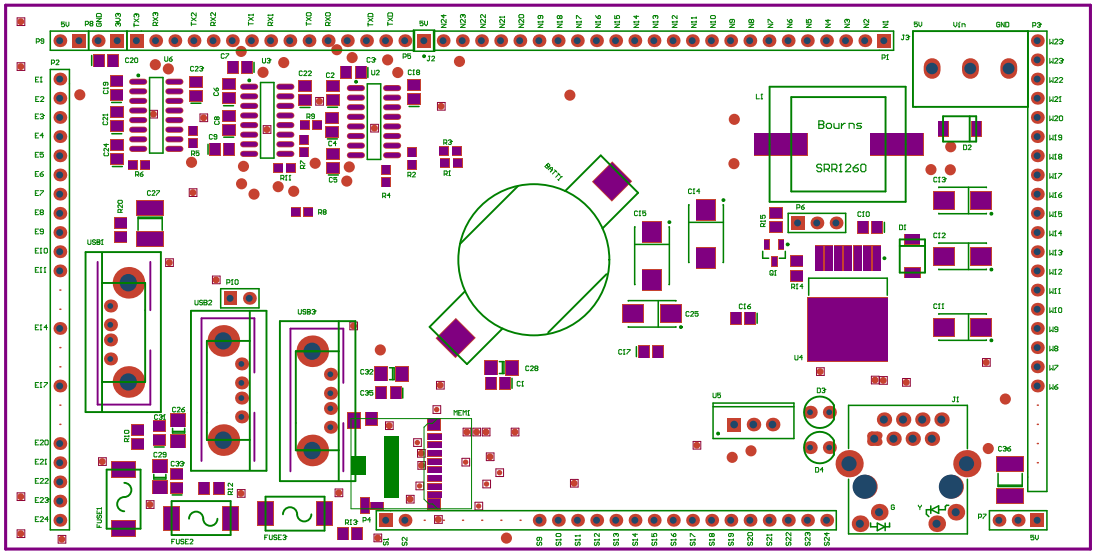
Bourns
SRR1260
BATT1
MEM1
USB1
USB2
USB3
FUSE1
FUSE2
FUSE3
Vin
GND
5V

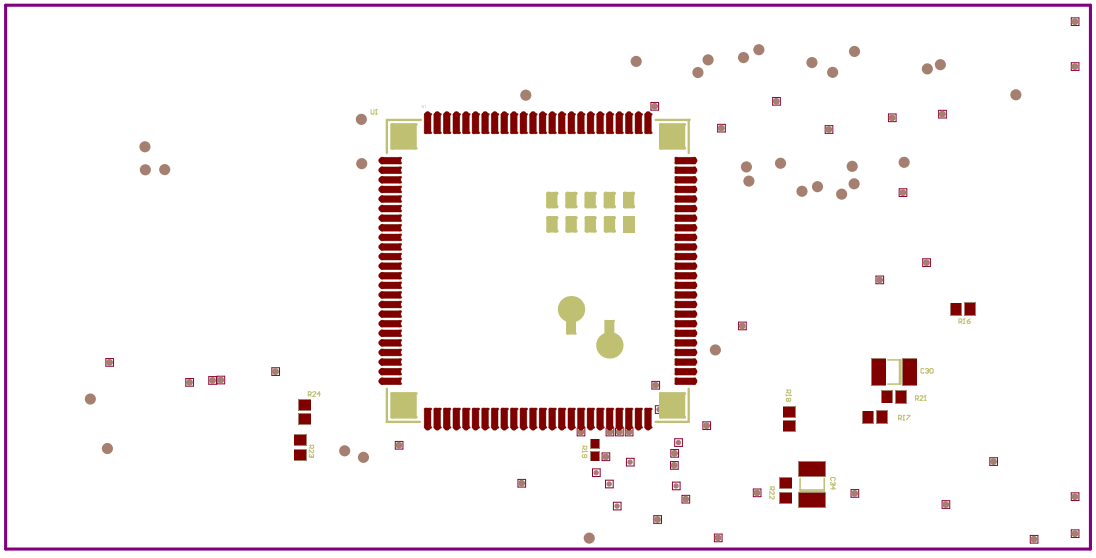
U1
R24
R23
R19
R18
R16
C30
R21
R17
R22
C34

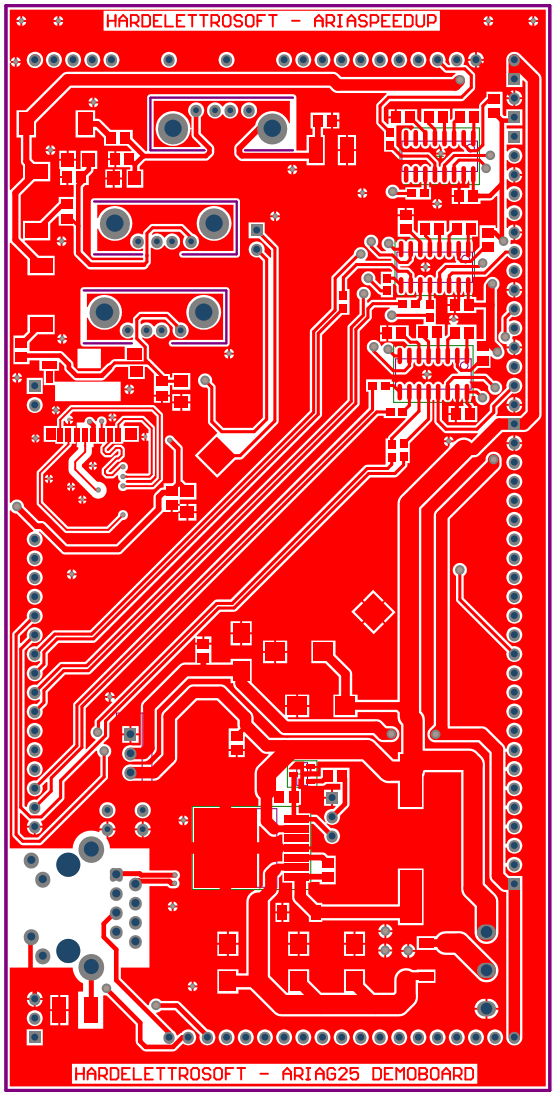
HARDELETTROSOFT - ARIASPEEDUP
HARDELETTROSOFT - ARIAG25 DEMOBOARD

HARDELETTROSOFT - ARIA625 DEMOBOARD
REV. 1.2
HARDELETTROSOFT - ARIASPEEDUP